| | |
|---|---|
| DRG. No. | W80GC000/2 |
| DRG. REF. | |

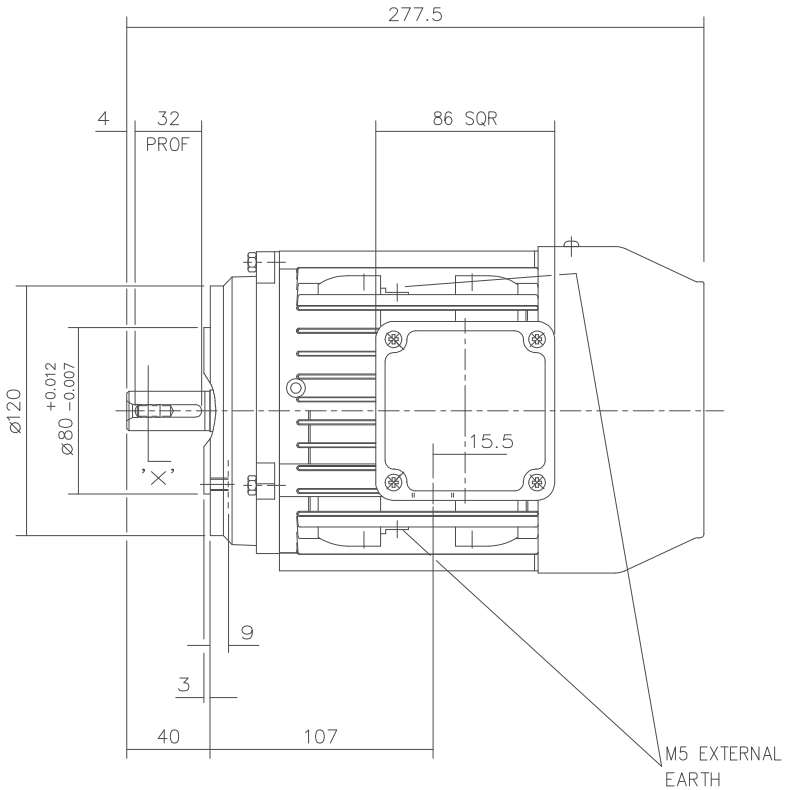


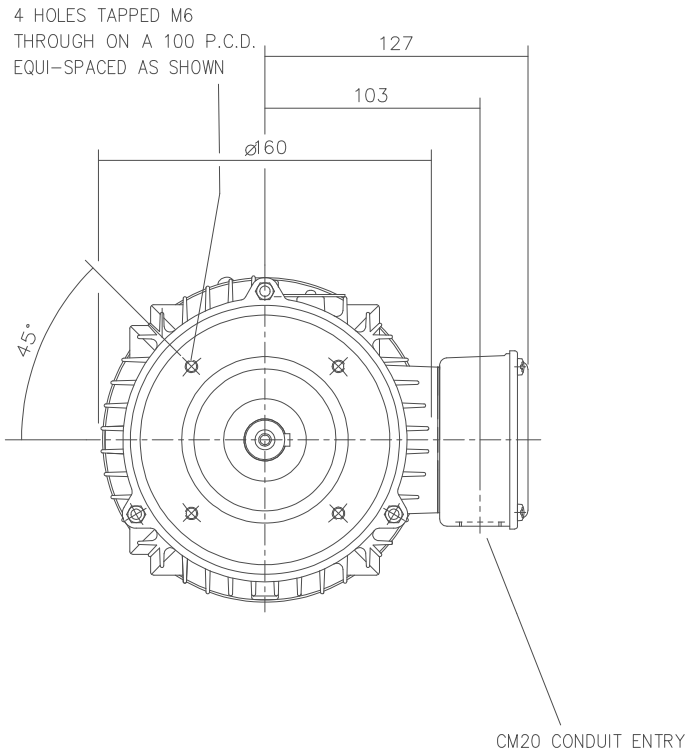


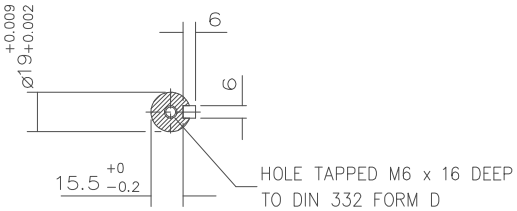


VIEW ON 'X'

TERMINAL BOX POSITION:- CAN BE ARRANGED AT EITHER 9,12 OR 3 O'CLOCK.
STANDARD TERMINAL BOX POSITION IS 3 O'CLOCK AS SHOWN.
CONDUIT ENTRIES:- TERMINAL BOX CAN BE ROTATED AT 90° INTERVALS
(CONDUIT ENTRY POSITION SHOWN FOR ILLUSTRATION ONLY).
NOTE: CARE SHOULD BE TAKEN TO ENSURE THAT SCREWS OR STUDS DO NOT
EXTEND INSIDE THE MOTOR BEYOND THE DEPTH OF THE THREAD FIXING HOLE

| | | |
|---|---|---|
| CUSTOMER | | |
| ORDER No. | | |
| PART No. | | |
| OUR ORDER No. | | |
| FRAME SIZE | | |
| KW. | RPM. | |
| Hz | PHASE | |
| VOLTS | POLES | |
| BRGS. | DE. | NDE. |
| MOTOR NETT WT. | | Kg. |
| SPECIAL REMARKS | | |

ALL DIMENSIONS IN MILLIMETRES.

FIRST ANGLE PROJECTION

BROOK CROMPTON

Huddersfield, HD1 3LJ
ENGLAND

| SHEET SIZE | TITLE | | NAME | DATE | DRG. No. | W80GC000/2 |
|---|---|---|---|---|---|---|
| A3 | OUTLINE DIMENSION DRAWING W ALUMINIUM TOTALLY ENCLOSED FAN COOLED 80 FRAME 'C' FACE MOUNTED MOTOR | DRAWN | RS. | 07/03/97 | DRG. REF. | |
| | | CHECKED | AH. | 07/03/97 | | |
| | | SCALE | 1:2.5 | | REVISION: VLS | DATE 27-04-01 |